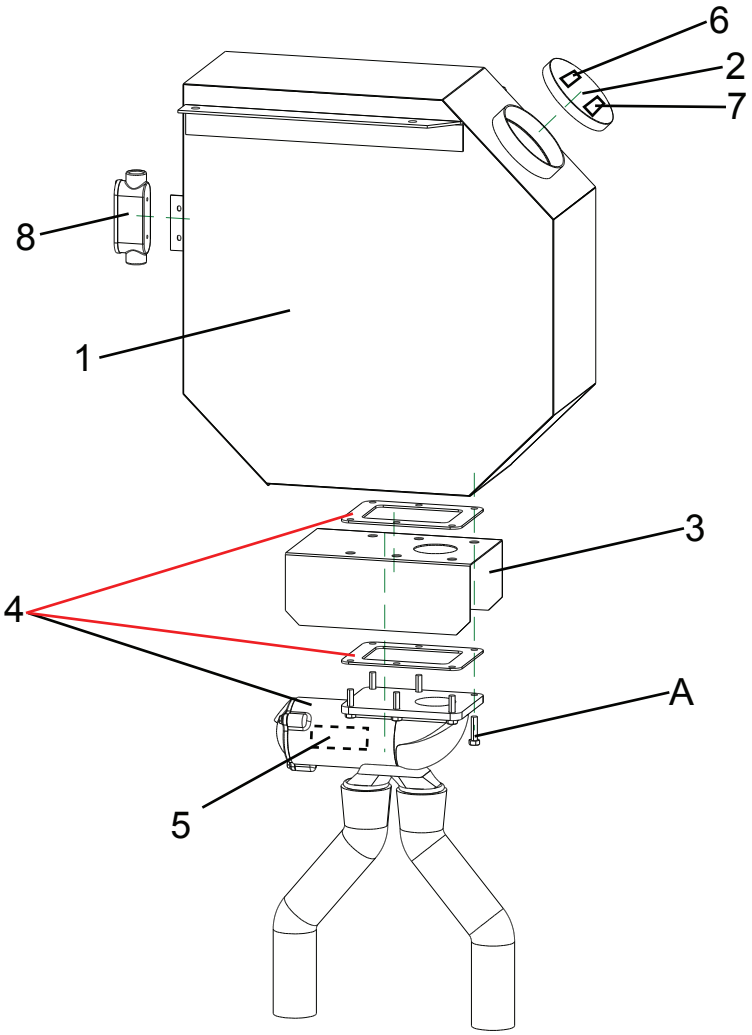

Ref #	Name	Part #
1	Powder Coated Steel Sander Tank	SN861T
2	Tank Cap w/ Retaining Lanyard	S4-53-04
3	Powder Coated Steel Valve Guard	SP-02B
4	Operating Unit Area (includes gaskets)	see page A6

Ref #	Name	Part #
5	Serial Number Decal (Inside Casting)	
6	Elston Logo Decal	SD-03
7	Grit Decal	SD-04
8	Straight Conduit Junction	S150-11
1-14 (x2)	Set of Series 861 Sanders	S-N861

Hardware

A	5/16”-18 x 1 1/4” Serrated Hex Flange Bolt

Add a C to the SN861T and S-N861 for custom colors.

see page A3 for additional parts

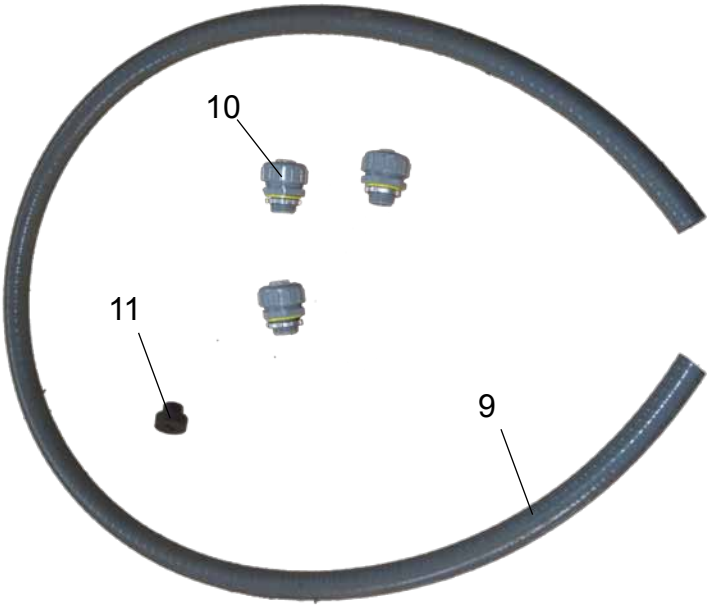

Ref #	Name	Part #
9	6 ft flexible nonmetallic conduit	S150-10
10	Straight thru watertight conduit fittings	S150-14 (x3)
11	Conduit Grommet	S150-8

Ref #	Name	Part #
12	Fuse Holder w/20A Fuse	SE-11
13	30ft 12 ga. Wire - Black	SE-12
14	Switch - Truck Style	S40135

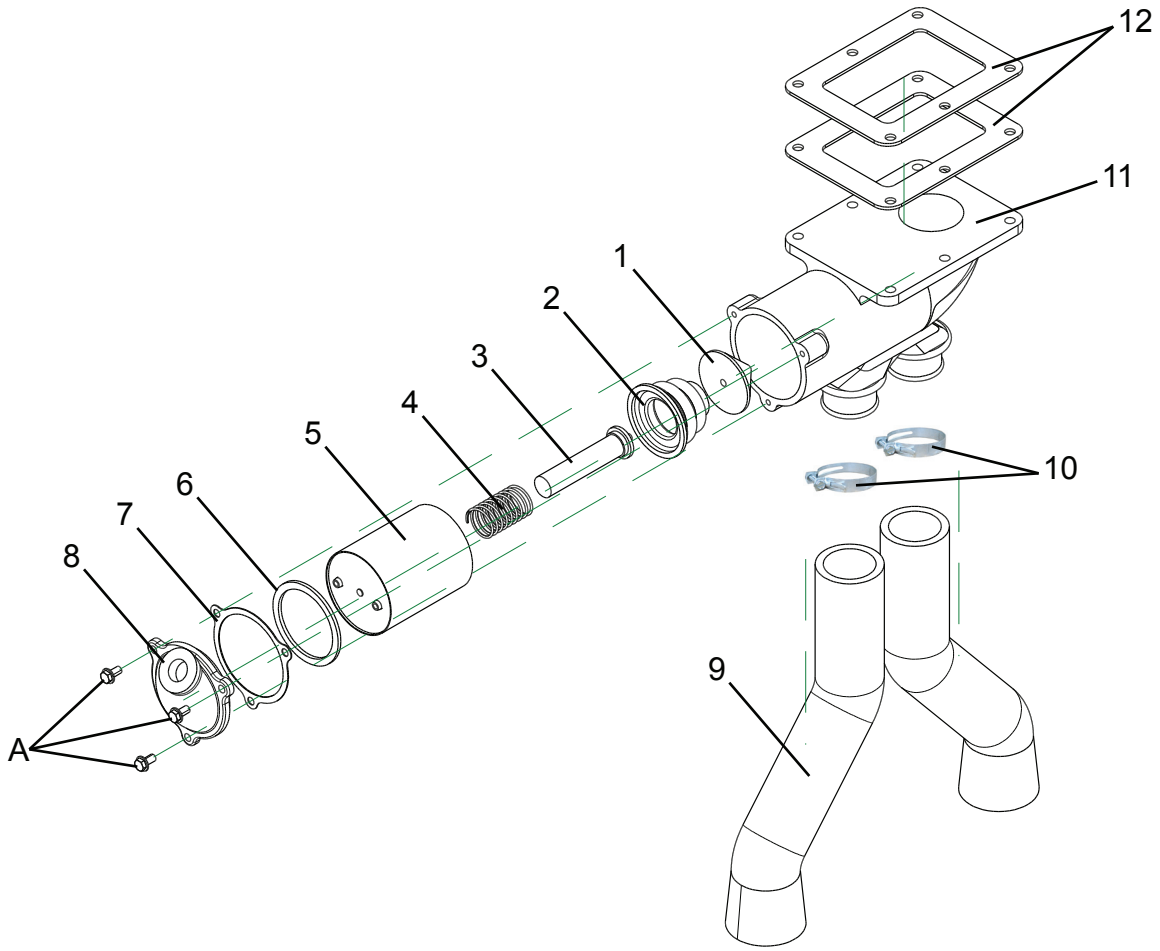

Ref #	Name	Part #
1	Cone Assembly	S15-85
2	Bellows	S161-2
3	Armature	S197-6
4	Compression Spring	S24-62
5	Solenoid - 12 V	S40085-501
6	Solenoid Gasket	S4-41G
7	Gasket for Cap	S16-87
8	Cap - Solenoid Opening*	S4-41B
9	Boot	S124-6
10	Clamp for Boot	S83-97

* Use S4-41C for units on quarterfender sanders with metal conduit

Ref #	Name	Part #
11	Valve Body	S40059
12	Gasket - Valve Body (one installed above SP-02 guard and one installed below)	S16-88
1-5	Solenoid & Valve Assy.	S40141
1-8,11	Operating Unit	S40084-501

Hardware

A 1/4”-20 x 3/4” Serrated Hex Flange Bolt

All hardware listed is coarse thread (UNC) and Grade 5 or better unless otherwise noted.